# Data Sheet
# FAC3003
## 50Ω Up to 2W DC to 30GHz

## Features

- Small Size (2×2mm DFN package)
- Super Wide bandwidth,DC-30GHz
- Excellent VSWR,1.35:1 typ.
- High Power Handling,2W
- Operating Temperature:-40°C to 85°C
- High ESD level*mls3

## Typical Applications

- 5G
- Test and Measurement
- Radar
- Communication
- Defense

## General Description

FAC3003 is absorptive fixed attenuator fabricated using highly reliable GaAs MMIC process. The model operates from DC to 30GHz.It achieves outstanding attenuation accuracy and flatness while maintains excellent VSWR throughout the entire band. The model can also handle input power up to 2W,which makes this model an ideal choice for a wide range of applications.

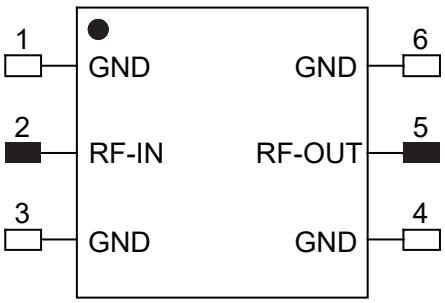


TOP VIEW

Notes:
1.This part has passed through 100% RF test.

**Yantel Corporation**
Add: No.308-322, 3F, Building 1, Juchuang Jingu Innovation Park, Wenyuan Road 35, Xili Street, Nanshan, Shenzhen, China
Tel: 86-755-8355-1886 Fax: 86-755-8355-2533

# Data Sheet
# FAC3003
## 50Ω Up to 2W DC to 30GHz

### Key Features

| Feature | Advantages |
|---|---|
| WIdeband operation,From DC to 30 GHz | Supports a wide array of applications including 5G, wireless infrastructure, microwave communications, satellite, defense and aerospace, medical broadband and optic applications |
| Small Size and simple to use (2 mm x 2 mm) | As a single chip solution, the FAC30 series occupies less board space than a lumped element approach, minimizes component count and ensures repeatable performance over wide frequency range. |
| Wide range of nominal attenuation values (0,1,2,3,4,5,6,7,8,9,10,12,15,20 & 30) | Small increment offering enables circuit designer to change attenuation values without motherboard redesign making the FAC30 series ideal for select at test application. |
| MCLP™ Package | Low Inductance, repeatable transitions, excellent thermal path make the FAC30 series an ideal solution as an alternative to “do it yourself” lumped element-based approach. |

* IPD - Integraded Passive Device.

### Product Marking

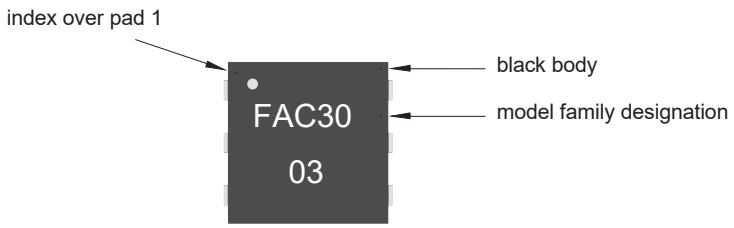


Marking may contain other features or characters for intemal lot control

### ESD Rating

Human Body Model (HBM): Class 2(Pass 2000V) per ANSI/ESD STM 5.1-2001

### Characterization Test Circuit

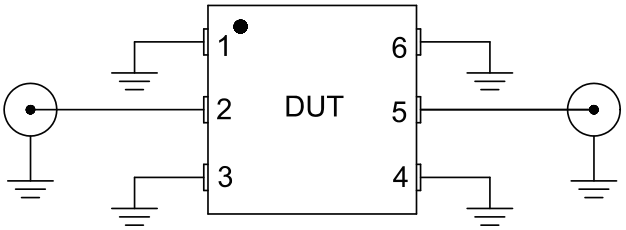


Block diagram fo Test Circuit used for characterization.


**Yantel Corporation**

Add: No.308-322, 3F, Building 1, Juchuang Jingu Innovation Park, Wenyuan Road 35, Xili Street, Nanshan, Shenzhen, China
Tel: 86-755-8355-1886 Fax: 86-755-8355-2533
For detailed performance specs & shopping online see Yantel web site : www.yantel-corp.com

# Data Sheet
# FAC3003
## 50Ω Up to 2W DC to 30GHz

### Electrical Specifications at 25º C

| Paramter | Freq.Range (GHz) | Min. | Typ. | Max. |
|---|---|---|---|---|
| Frequency Range | | DC | - | 30 |
| Attenuation (dB) | DC-30 | 2.9 | 3.06 | 3.6 |
| Return Loss (dB) | DC-30 | 12.5 | 21.8 | - |

## Test Curve

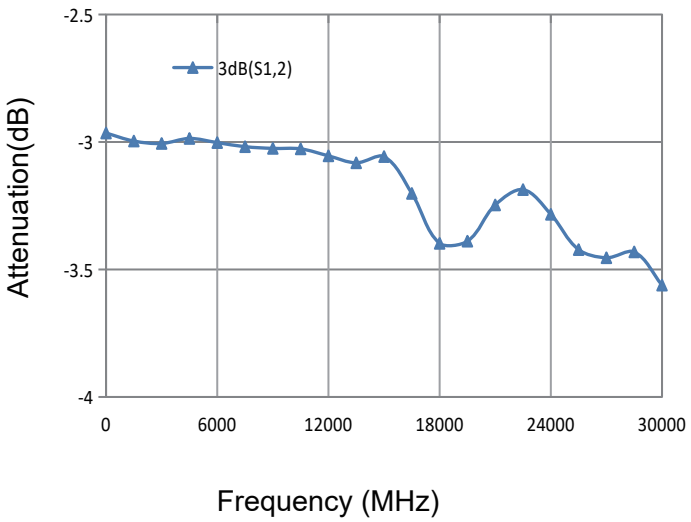


| Frequency MHZ | S12 (dB) | Return Loss(dB) | |
|---|---|---|---|
| | | S11 | S22 |
| 0.00 | -2.96 | -38.27 | -36.96 |
| 1500.00 | -3.00 | -35.79 | -32.99 |
| 3000.00 | -3.01 | -31.56 | -27.51 |
| 4500.00 | -2.99 | -28.19 | -25.00 |
| 6000.00 | -3.00 | -49.45 | -34.36 |
| 7500.00 | -3.02 | -28.90 | -31.64 |
| 9000.00 | -3.03 | -25.50 | -25.86 |
| 10500.00 | -3.03 | -26.53 | -28.07 |
| 12000.00 | -3.05 | -32.85 | -30.87 |
| 13500.00 | -3.08 | -27.83 | -28.77 |
| 15000.00 | -3.06 | -21.88 | -27.21 |
| 16500.00 | -3.20 | -14.50 | -16.46 |
| 18000.00 | -3.40 | -12.74 | -14.26 |
| 19500.00 | -3.39 | -14.81 | -16.34 |
| 21000.00 | -3.25 | -18.86 | -20.70 |
| 22500.00 | -3.19 | -19.21 | -20.05 |
| 24000.00 | -3.28 | -15.96 | -16.98 |
| 25500.00 | -3.42 | -14.29 | -16.83 |
| 27000.00 | -3.45 | -14.51 | -21.00 |
| 28500.00 | -3.43 | -14.83 | -20.47 |
| 30000.00 | -3.56 | -13.67 | -15.57 |

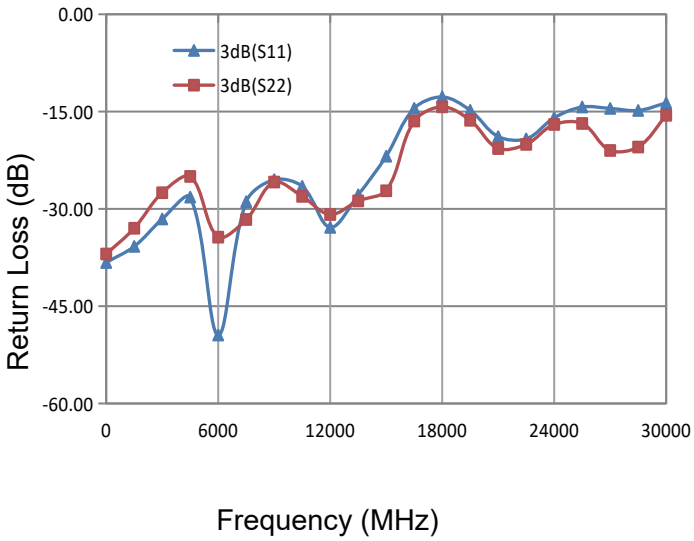



**Yantel Corporation**

Add: No.308-322, 3F, Building 1, Juchuang Jingu Innovation Park, Wenyuan Road 35, Xili Street, Nanshan, Shenzhen, China
Tel: 86-755-8355-1886 Fax: 86-755-8355-2533




For detailed performance specs & shopping online see Yantel web site : www.yantel-corp.com

# Data Sheet
# FAC3003
## 50Ω Up to 2W DC to 30GHz

## Outline Drawing

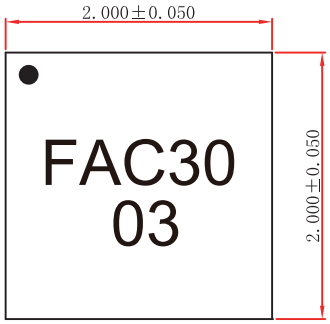


TOP VIEW

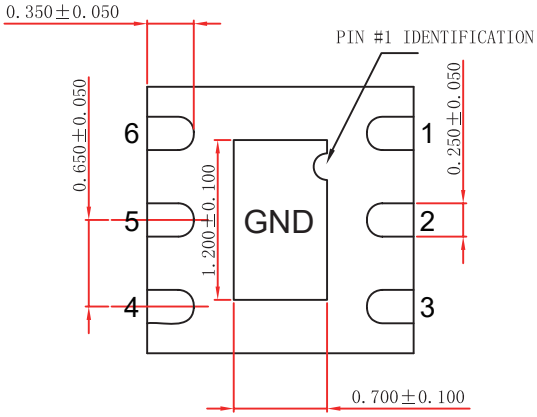


BOTTOM VIEW

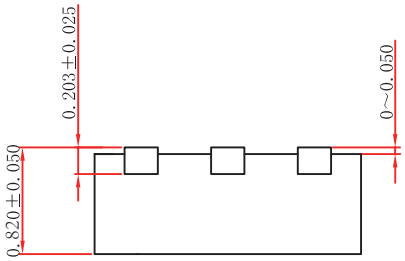


SIDE VIEW

## Land Pattern

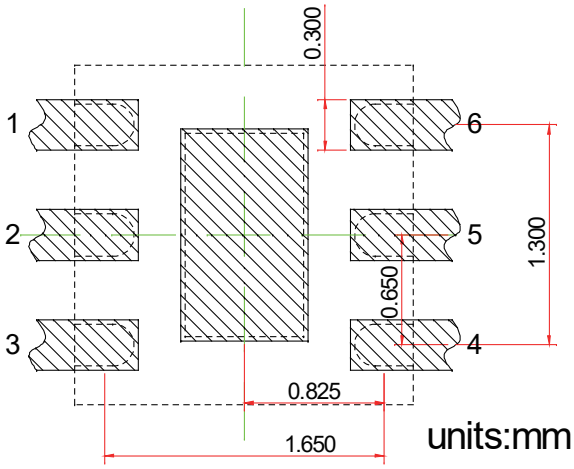


Recommended Land Pattern
Top View

**Notes:** All dimensions show in millimeters

## Pin Out

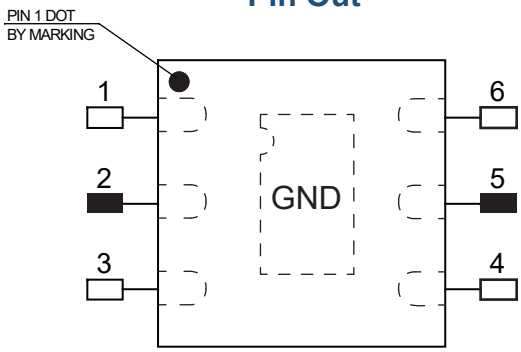


TOP VIEW

Notes:
1.Require to add Capacitors of DC Blocker between Pins(with black color) and external circuit to prevent DC signal entry to guranteeparts normal work.
2.This part has passed through 100% RF test.

| Pin # | Connection |
|---|---|
| 1 | GND |
| 2 | IN |
| 3 | GND |
| 4 | GND |
| 5 | OUT |
| 6 | GND |
| Center Pad | GND |


**Yantel Corporation**
Add: No.308-322, 3F, Building 1, Juchuang Jingu Innovation Park, Wenyuan Road 35, Xili Street, Nanshan, Shenzhen, China
Tel: 86-755-8355-1886 Fax: 86-755-8355-2533

# Data Sheet
# FAC3003
## 50Ω Up to 2W DC to 30GHz

### Tape and Reel Drawing

Feeding Direction

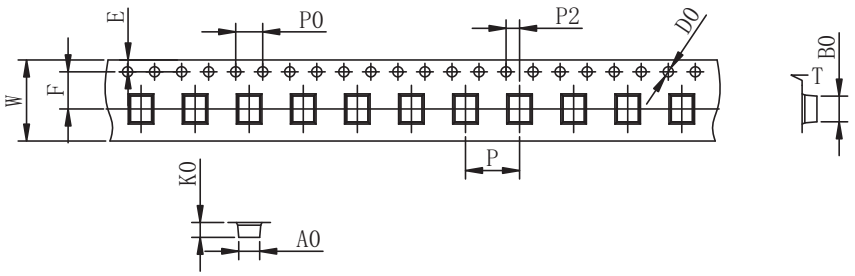


| ITEM | W | A0 | B0 | K0 | K1 | P | F | E | D0 | P0 | P2 | t | 7" |
|---|---|---|---|---|---|---|---|---|---|---|---|---|---|
| DIM(mm) | 8.0 | 2.35 | 2.45 | 1.15 | | 4.0 | 3.5 | 1.75 | 1.5 | 4.0 | 2.0 | 0.2 | P/R |
| TOLE | +0.10 -0.10 | +0.10 -0.10 | +0.10 -0.10 | +0.10 -0.10 | +0.10 -0.10 | +0.10 -0.10 | +0.10 -0.10 | +0.10 -0.10 | +0.10 -0.00 | +0.10 -0.10 | +0.10 -0.10 | +0.05 -0.05 | 3000pcs |

Notice:

A.10 Sprocket hole pitch cumulative tolerance is 0.2mm.

B. Carrier camber shall be not more than 1mm per 100mm through a length of 250mm.

C. All dimensions meet EIA-418-B requirements.

D. A0 & B0 measured as indicated.

E. K0 measured from a place on the inside bottom of the pocket to top surface of carrier.

F. Material: PE 100

G. Thickness: 0.20±0.05mm

H. 3000 units (maximum) / T&R

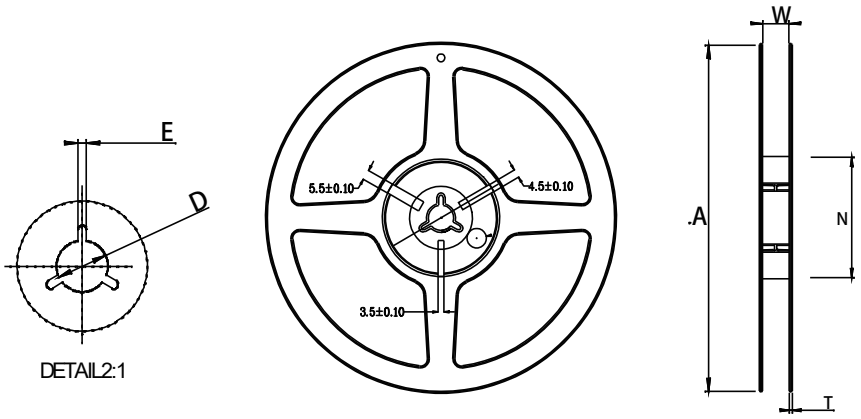


| Symbol | Dimensions(mm) |
|---|---|
| W | 9.0±0.4 |
| A | 180±0.3 |
| N | 60±0.3 |
| T | 1.4±0.2 |
| E | 3±0.5 |
| D | 25±0.8 |

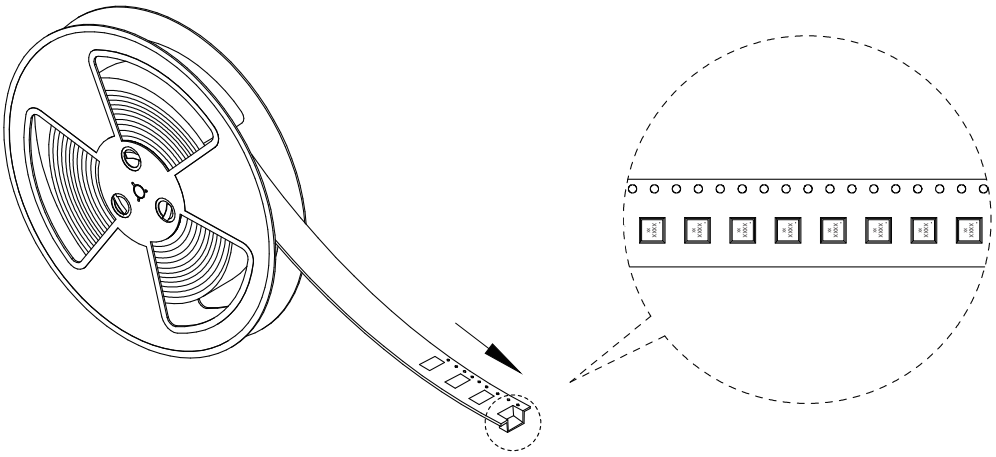


**Yantel Corporation**

Add: No.308-322, 3F, Building 1, Juchuang Jingu Innovation Park, Wenyuan Road 35, Xili Street, Nanshan, Shenzhen, China

Tel: 86-755-8355-1886 Fax: 86-755-8355-2533