Data Sheet
FAC3006
50Ω Up to 1.6W DC to 30GHz

Features

- Small Size (2×2mm DFN package)
- Super Wide bandwidth,DC-30GHz
- Excellent VSWR,1.3:1 typ.
- High Power Handling,1.6W
- Operating Temperature:-40°C to 85°C
- High ESD level*mls3

Typical Applications

- 5G
- Test and Measurement
- Radar
- Communication
- Defense

General Description

FAC3006 is absorptive fixed attenuator fabricated using highly reliable GaAs MMIC process. The model operates from DC to 30GHz.It achieves outstanding attenuation accuracy and flatness while maintains excellent VSWR throughout the entire band. The model can also handle input power up to 1.6W,which makes this model an ideal choice for a wide range of applications.

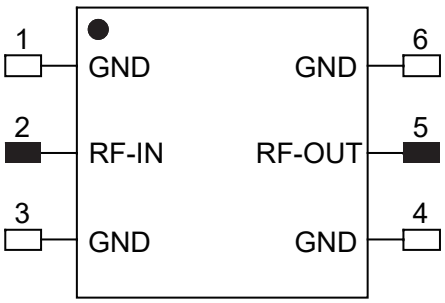

TOP VIEW

Notes:
1.This part has passed through 100% RF test.

Yantel Corporation
Add: No.308-322, 3F, Building 1, Juchuang Jingu Innovation Park, Wenyuan Road 35, Xili Street, Nanshan, Shenzhen, China
Tel: 86-755-8355-1886 Fax: 86-755-8355-2533

Data Sheet
FAC3006
50Ω Up to 1.6W DC to 30GHz

Key Features

Feature	Advantages
WIdeband operation,From DC to 30 GHz	Supports a wide array of applications including 5G, wireless infrastructure, microwave communications, satellite, defense and aerospace, medical broadband and optic applications
Small Size and simple to use (2 mm x 2 mm)	As a single chip solution, the FAC30 series occupies less board space than a lumped element approach, minimizes component count and ensures repeatable performance over wide frequency range.
Wide range of nominal attenuation values (0,1,2,3,4,5,6,7,8,9,10,12,15,20 & 30)	Small increment offering enables circuit designer to change attenuation values without motherboard redesign making the FAC30 series ideal for select at test application.
MCLP™ Package	Low Inductance, repeatable transitions, excellent thermal path make the FAC30 series an ideal solution as an alternative to “do it yourself” lumped element-based approach.

* IPD - Integraded Passive Device.

Product Marking

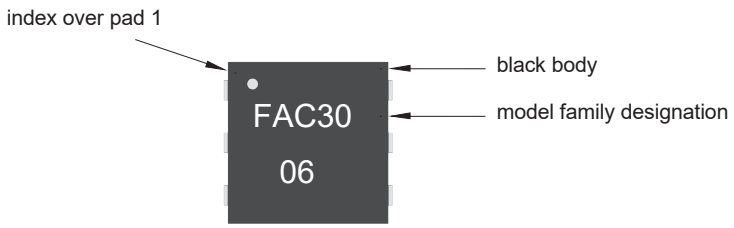

Marking may contain other features or characters for intemal lot control

ESD Rating

Human Body Model (HBM): Class 2(Pass 2000V) per ANSI/ESD STM 5.1-2001

Characterization Test Circuit

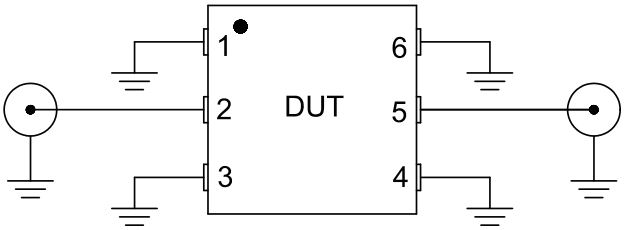

Block diagram fo Test Circuit used for characterization.

Yantel Corporation

Add: No.308-322, 3F, Building 1, Juchuang Jingu Innovation Park, Wenyuan Road 35, Xili Street, Nanshan, Shenzhen, China
Tel: 86-755-8355-1886 Fax: 86-755-8355-2533
For detailed performance specs & shopping online see Yantel web site : www.yantel-corp.com

Data Sheet
FAC3006
50Ω Up to 1.6W DC to 30GHz

Electrical Specifications at 25º C

Paramter	Freq.Range (GHz)	Min.	Typ.	Max.
Frequency Range		DC	-	30
Attenuation (dB)	DC-30	5.9	6.1	7
Return Loss (dB)	DC-30	12	18	-

Test Curve

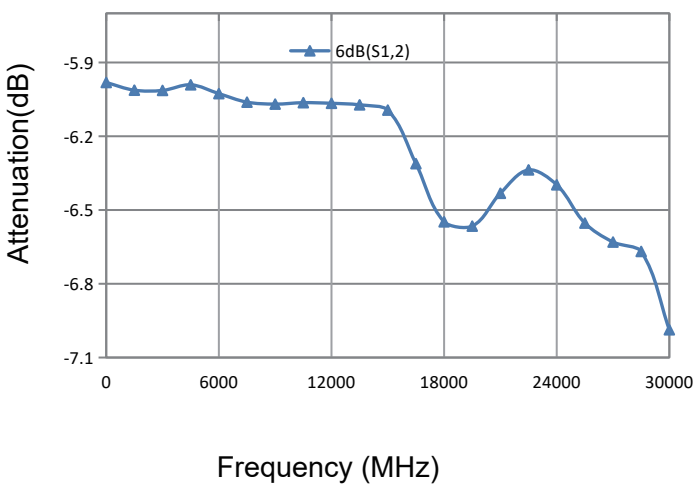

Frequency MHZ	S12 (dB)	Return Loss(dB) S11	S22
0	-5.98	-35.71	-34.63
1500	-6.01	-30.42	-31.63
3000	-6.01	-29.23	-30.02
4500	-5.99	-32.17	-31.10
6000	-6.03	-33.10	-36.87
7500	-6.06	-23.13	-24.10
9000	-6.07	-20.62	-21.44
10500	-6.06	-21.06	-22.88
12000	-6.07	-24.00	-31.62
13500	-6.07	-30.63	-31.48
15000	-6.09	-21.35	-20.20
16500	-6.31	-14.31	-14.88
18000	-6.55	-12.25	-13.69
19500	-6.57	-13.25	-15.35
21000	-6.43	-16.01	-18.54
22500	-6.34	-16.38	-18.67
24000	-6.40	-14.49	-15.85
25500	-6.55	-14.34	-14.63
27000	-6.63	-15.44	-16.09
28500	-6.67	-14.79	-16.16
30000	-6.99	-12.21	-12.47

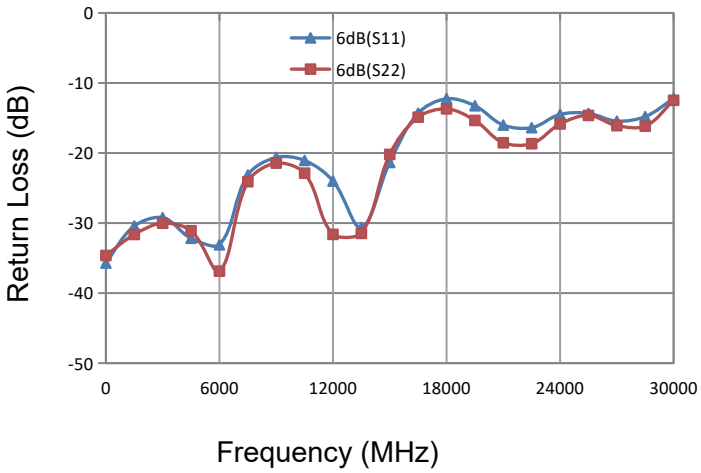

Yantel Corporation

Add: No.308-322, 3F, Building 1, Juchuang Jingu Innovation Park, Wenyuan Road 35, Xili Street, Nanshan, Shenzhen, China
Tel: 86-755-8355-1886 Fax: 86-755-8355-2533

For detailed performance specs & shopping online see Yantel web site : www.yantel-corp.com

Data Sheet
FAC3006
50Ω Up to 1.6W DC to 30GHz

Outline Drawing

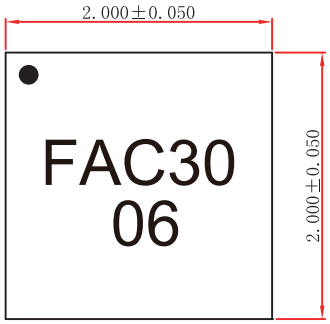

TOP VIEW

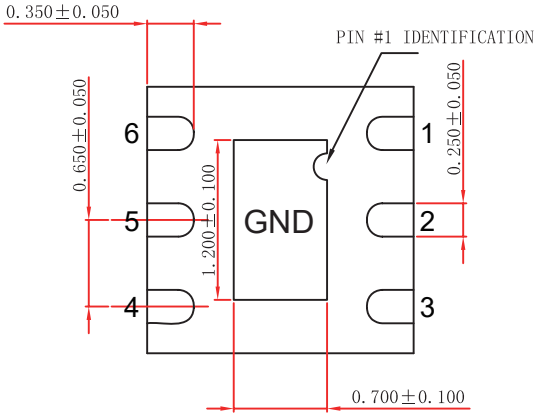

BOTTOM VIEW

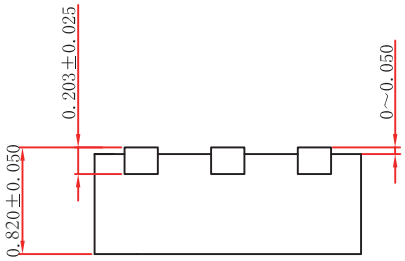

SIDE VIEW

Land Pattern

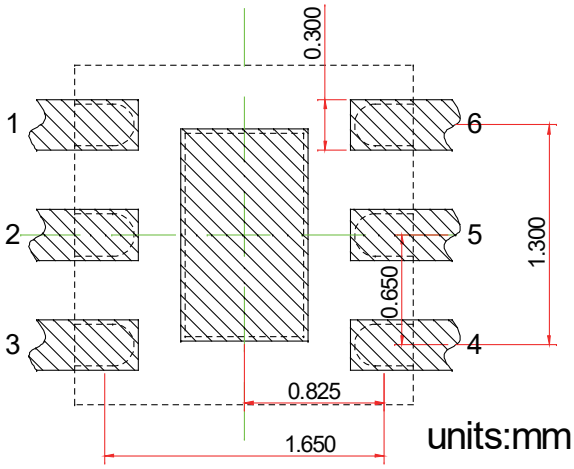

Recommended Land Pattern
Top View

Notes: All dimensions show in millimeters

Pin Out

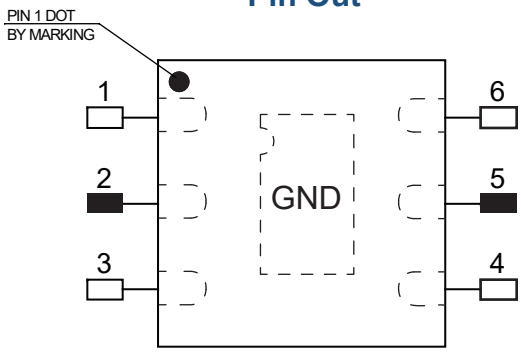

TOP VIEW

Notes:
1.Require to add Capacitors of DC Blocker between Pins(with black color) and external circuit to prevent DC signal entry to guranteeparts normal work.
2.This part has passed through 100% RF test.

Pin #	Connection
1	GND
2	IN
3	GND
4	GND
5	OUT
6	GND
Center Pad	GND

Yantel Corporation
Add: No.308-322, 3F, Building 1, Juchuang Jingu Innovation Park, Wenyuan Road 35, Xili Street, Nanshan, Shenzhen, China
Tel: 86-755-8355-1886 Fax: 86-755-8355-2533

Data Sheet
FAC3006
50Ω Up to 1.6W DC to 30GHz

Tape and Reel Drawing

Feeding Direction

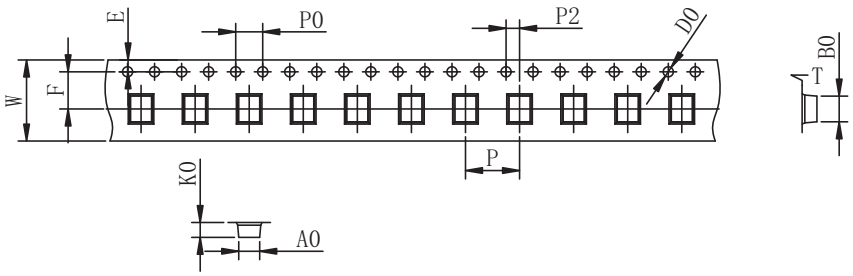

ITEM	W	A0	B0	K0	K1	P	F	E	D0	P0	P2	t	7"
DIM(mm)	8.0	2.35	2.45	1.15		4.0	3.5	1.75	1.5	4.0	2.0	0.2	P/R
TOLE	+0.10 -0.10	+0.10 -0.10	+0.10 -0.10	+0.10 -0.10	+0.10 -0.10	+0.10 -0.10	+0.10 -0.10	+0.10 -0.10	+0.10 -0.00	+0.10 -0.10	+0.10 -0.10	+0.05 -0.05	3000pcs

Notice:

A.10 Sprocket hole pitch cumulative tolerance is 0.2mm.

B. Carrier camber shall be not more than 1mm per 100mm through a length of 250mm.

C. All dimensions meet EIA-418-B requirements.

D. A0 & B0 measured as indicated.

E. K0 measured from a place on the inside bottom of the pocket to top surface of carrier.

F. Material: PE 100

G. Thickness: 0.20±0.05mm

H. 3000 units (maximum) / T&R

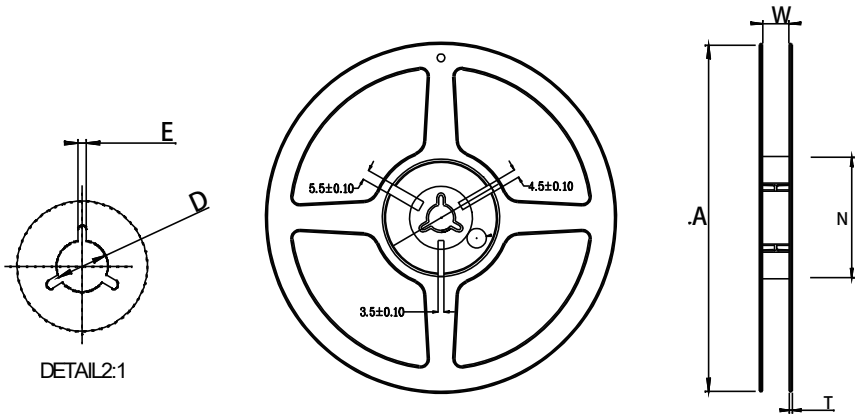

Symbol	Dimensions(mm)
W	9.0±0.4
A	180±0.3
N	60±0.3
T	1.4±0.2
E	3±0.5
D	25±0.8

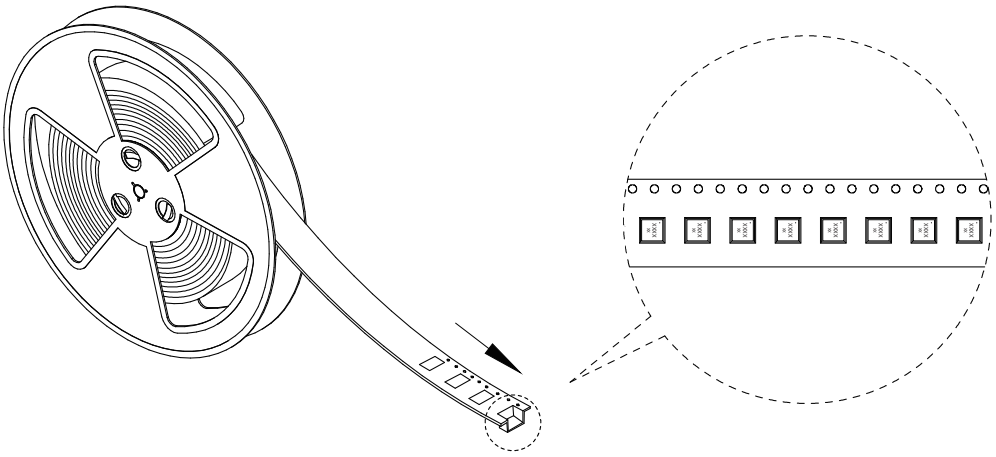

Yantel Corporation

Add: No.308-322, 3F, Building 1, Juchuang Jingu Innovation Park, Wenyuan Road 35, Xili Street, Nanshan, Shenzhen, China

Tel: 86-755-8355-1886 Fax: 86-755-8355-2533